UNIVERSITY OF CAMBRIDGE

MATHEMATICAL TRIPOS Part III

Friday, 4 June, 2010 9:00 am to 11:00 am

PAPER 49

QUANTUM COMPUTATION

*Attempt no more than **THREE** questions.*

*There are **FOUR** questions in total.*

The questions carry equal weight.

STATIONERY REQUIREMENTS
Cover sheet
Treasury Tag
Script paper

SPECIAL REQUIREMENTS
None

You may not start to read the questions printed on the subsequent pages until instructed to do so by the Invigilator.

The following standard gate notation is used in this paper. Note that I denotes the identity operator throughout.

$$H = \frac{1}{\sqrt{2}}\big(|0\rangle\langle 0| + |0\rangle\langle 1| + |1\rangle\langle 0| - |1\rangle\langle 1| \big)$$

$$X = |0\rangle\langle 1| + |1\rangle\langle 0|$$

$$Z = |0\rangle\langle 0| - |1\rangle\langle 1|$$

$$C_X = |0\rangle\langle 0| \otimes I + |1\rangle\langle 1| \otimes X$$

$$C_Z = |0\rangle\langle 0| \otimes I + |1\rangle\langle 1| \otimes Z$$

$$\text{Toffoli} = (|00\rangle\langle 00| + |01\rangle\langle 01| + |10\rangle\langle 10|) \otimes I + |11\rangle\langle 11| \otimes X$$

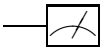

Computational basis measurement

1

This question involves Grover's search algorithm

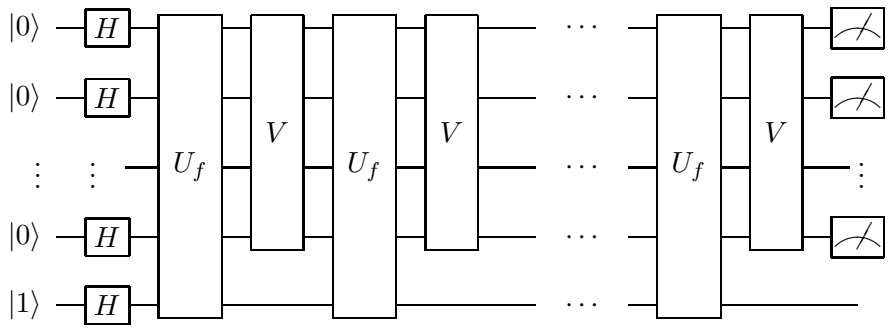

in which the oracle U_f is applied k times, there are $n+1$ qubits, and

$$U_f = \sum_{x=0}^{2^n-1} \sum_{y=0}^{1} |x\rangle\langle x| \otimes |y + f(x) \bmod 2\rangle\langle y|$$

$$V = H^{\otimes n}(2|0\rangle\langle 0| - I)\, H^{\otimes n}\,.$$

(**a**) Consider the case in which

$$f(x) = \delta_{x,a} = \begin{cases} 1 & \text{if } x = a \\ 0 & \text{if } x \neq a \end{cases}$$

for $a \in \{0, 1, \ldots 2^n - 1\}$. Using the result that

$$\left|\langle\phi|\left((2|\psi\rangle\langle\psi| - I)(I - 2|\phi\rangle\langle\phi|)\right)^k|\psi\rangle\right|^2 = \sin^2\left((2k+1)\,\alpha\right)\,,$$

where $|\psi\rangle$ and $|\phi\rangle$ are any two normalised states and $\alpha = \sin^{-1}|\langle\phi|\psi\rangle|$, show that the final measurement in the above circuit gives a with probability $\sin^2((2k+1)\theta)$, where $\theta = \sin^{-1}\left(1/\sqrt{2^n}\right)$.

(**b**) Now consider the case in which $f(x) = 0$ for all x. What is the probability distribution for the measurement results in this case?

(**c**) Given the promise that either $f(x) = 0$ for all x, or $f(x) = \delta_{x,a}$ for some unknown $a \in \{0, 1, \ldots 2^n - 1\}$, give an algorithm to determine which of these two possibilities is correct with probability of success at least $3/4$ for all $n > 1$, which requires $O(\sqrt{2^n})$ uses of the oracle.

2

A graph state is obtained by preparing a qubit in the $|+\rangle$ state for each node in a graph, where $|\pm\rangle = \frac{1}{\sqrt{2}}(|0\rangle \pm |1\rangle)$, and then applying a C_Z gate along each edge of the graph. Any quantum computation can be carried out by performing a sequence of single-qubit measurements on an appropriate graph state.

Of particular interest are single-qubit phase measurements, characterised by projectors $\{|v_0(\theta)\rangle\langle v_0(\theta)|, |v_1(\theta)\rangle\langle v_1(\theta)|\}$ for $\theta \in [0, 2\pi]$ which satisfy

$$\Big(|v_r(\theta)\rangle\langle v_r(\theta)| \otimes I\Big) C_Z |\psi\rangle |+\rangle = \frac{1}{\sqrt{2}}\Big(I \otimes X^r U(\theta)\Big) |v_r(\theta)\rangle |\psi\rangle$$

for all $|\psi\rangle$, where $U(\theta) = |+\rangle\langle 0| + e^{-i\theta}|-\rangle\langle 1|$ and $r \in \{0, 1\}$.

(**a**) Prove the relation $U(\theta)X = e^{-i\theta} Z U(-\theta)$.

(**b**) Show how to simulate the quantum circuit

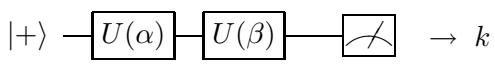

by a sequence of single qubit measurements on an appropriate graph state, and deterministic classical processing of the results. Your procedure should generate a bit k with the same probability distribution as the circuit.

(**c**) Prove that

$$U(\beta)\,U(\alpha)\,|+\rangle = e^{-i\frac{\alpha}{2}}\left(\cos\left(\frac{\alpha}{2}\right)|+\rangle + i\sin\left(\frac{\alpha}{2}\right)e^{-i\beta}|-\rangle\right).$$

(**d**) Suppose that Alice has the first two qubits of the three qubit graph state $(I \otimes C_Z)(C_Z \otimes I)\,|+\rangle|+\rangle|+\rangle$, and Bob has the third qubit. Alice is also given two angles $\alpha, \beta \in [0, 2\pi]$. Give a protocol in which Alice sends only two classical bits to Bob, after which Bob is left with a qubit in the state $U(\beta)\,U(\alpha)\,|+\rangle$, up to an irrelevant global phase factor.

3

Consider the circuit below showing a unitary coding and error correction scheme, where the error E is also unitary.

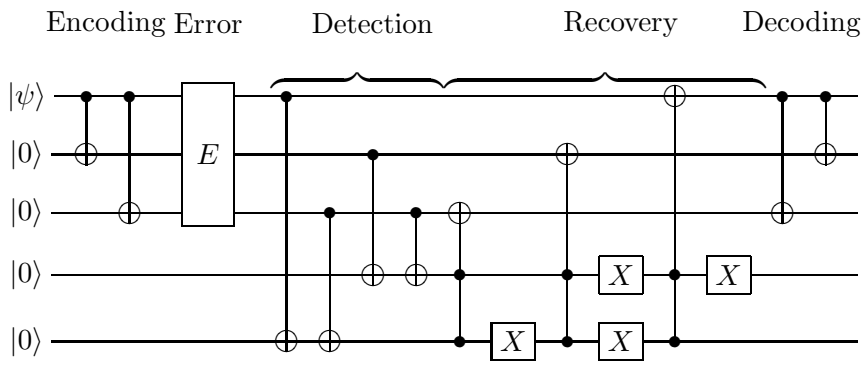

We say that the circuit protects against the error E if for any $|\psi\rangle$ the output state is the tensor product of $|\psi\rangle$ for the top qubit with any state for the remaining four qubits.

(**a**) Briefly explain the structure of the circuit, and give the output state when $E = X \otimes I \otimes I$, corresponding to a bit-flip error on the top qubit.

(**b**) Find the reduced density operator ρ describing the state of the top output qubit when the error is $E = H \otimes I \otimes I$ and $|\psi\rangle = \alpha\,|0\rangle + \beta\,|1\rangle$.

(**c**) Show that if the circuit protects against errors E_1 and E_2, it will also protect against an error given by

$$E = \alpha E_1 + \beta E_2\,,$$

where α and β are any complex numbers such that E is unitary.

(**d**) How would you change the circuit to protect against the four error cases

$$E = I \otimes I \otimes I\,,$$
$$E = Z \otimes I \otimes I\,,$$
$$E = I \otimes Z \otimes I\,,$$
$$E = I \otimes I \otimes Z\,.$$

4

Consider the set of single-qubit unitary gates described by

$$R_m = |0\rangle\langle 0| + \exp\left(i\,\frac{2\pi m}{2^n}\right)|1\rangle\langle 1| \ ,$$

where $m \in \{0,\,1,\,\ldots\,2^n-1\}$ and n is a known positive integer.

Suppose that you are given an unlimited supply of one particular gate R_a from this set, where $a \in \{0,\,1,\,\ldots\,2^n-1\}$ is unknown.

(**a**) Show that the n qubit state

$$|\psi\rangle = \frac{1}{\sqrt{2^n}}\sum_{x=0}^{2^n-1}\exp\left(\frac{2\,\pi i\,ax}{2^n}\right)|x\rangle$$

is given by

$$|\psi\rangle = \left(R_a^{2^{n-1}} \otimes R_a^{2^{n-2}} \otimes \ldots \otimes R_a\right) H^{\otimes n}\,|0\rangle \ ,$$

and hence can be prepared using R_a gates.

(**b**) Prove that we can obtain the unknown integer a by applying the inverse Fourier transform $F^\dagger$ to $|\psi\rangle$, given by

$$F^\dagger = \frac{1}{\sqrt{2^n}}\sum_{k=0}^{2^n-1}\sum_{y=0}^{2^n-1}\exp\left(\frac{-2\,\pi iky}{2^n}\right)|y\rangle\langle k| \ ,$$

and then measuring the resulting state in the computational basis.

(**c**) If a is odd, show that $R_a^k = R_a^l$ if and only if $(k-l) \bmod 2^n = 0$, where k and l are integers. Hence prove that by repeatedly applying R_a when a is odd we can generate the complete set of gates R_m for all $m \in \{0,\,1,\,\ldots\,2^n-1\}$.

(**d**) Suppose that we want to approximate the gate $R(\theta) = |0\rangle\langle 0| + e^{i\theta}|1\rangle\langle 1|$ for an arbitrary $\theta \in [0, 2\pi]$ using a gate from the discrete set R_m. If $R_m = R(\theta+\delta)$, show that

$$|R_m|\phi\rangle - R(\theta)|\phi\rangle| \leqslant |\delta|$$

for all normalised single qubit states $|\phi\rangle$.

END OF PAPER